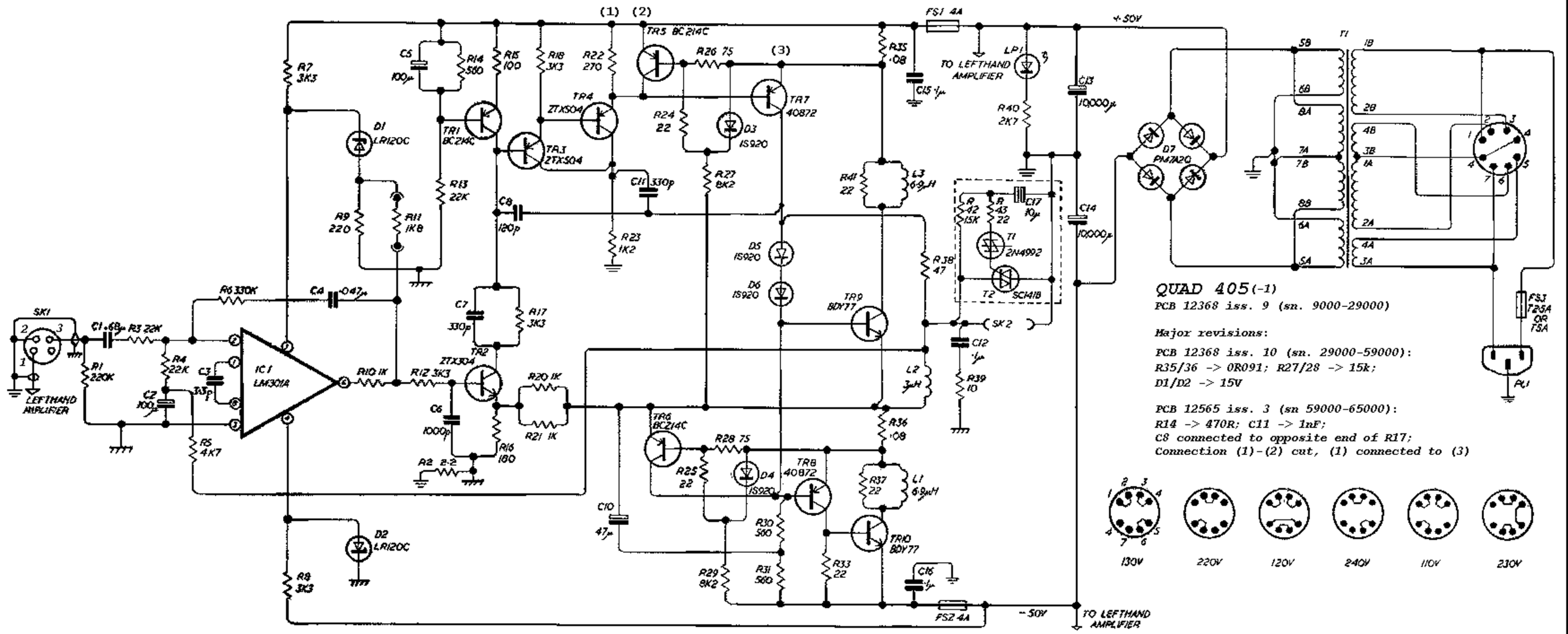
(1) (2)
(3)
TR5 BC214C
R26 75
FS1 4A
+50V
R35 ·08
C15 ·1µ
TO LEFTHAND AMPLIFIER
LP1
R40 2K7
C13 10,000µ
C14 10,000µ
T1
D7 PM7A20
R7 3K3
C5 100µ
R14 560
R15 100
R18 3K3
R22 270
TR4 ZTX504
TR1 BC214C
TR3 ZTX504
D1 LR120C
R13 22K
R9 220
R11 1K8
C8 180p
C11 330p
R23 1K2
R24 22
D3 IS920
TR7 40872
R27 8K2
R41 22
L3 6·8µH
D5 IS920
D6 IS920
TR9 BDY77
R38 47
R42 15K
R43 22
C17 10µ
T1 2N4992
T2 SC141B
SK2
C12 ·1µ
R39 10
L2 3µH
R36 ·08
L1 6·8µH
R37 22
TR10 BDY77
C16 ·1µ
FS2 4A
-50V
TO LEFTHAND AMPLIFIER
SK1
C1 ·68µ
R3 22K
R1 220K
R4 22K
C2 100µ
C3 33p
R5 4K7
R6 330K
C4 ·047µ
IC1 LM301A
R10 1K
R12 3K3
C7 330p
R17 3K3
TR2 ZTX504
C6 1000p
R16 180
R2 2·2
R20 1K
R21 1K
TR6 BC214C
R28 75
R25 22
D4 IS920
TR8 40872
C10 47µ
R30 560
R31 560
R29 8K2
R33 22
R8 3K3
D2 LR120C
LEFTHAND AMPLIFIER
FS3 T25A OR T5A
P1
QUAD 405(-1)
PCB 12368 iss. 9 (sn. 9000-29000)
Major revisions:
PCB 12368 iss. 10 (sn. 29000-59000):
R35/36 -> 0R091; R27/28 -> 15k;
D1/D2 -> 15V
PCB 12565 iss. 3 (sn 59000-65000):
R14 -> 470R; C11 -> 1nF;
C8 connected to opposite end of R17;
Connection (1)-(2) cut, (1) connected to (3)
130V
220V
120V
240V
110V
230V

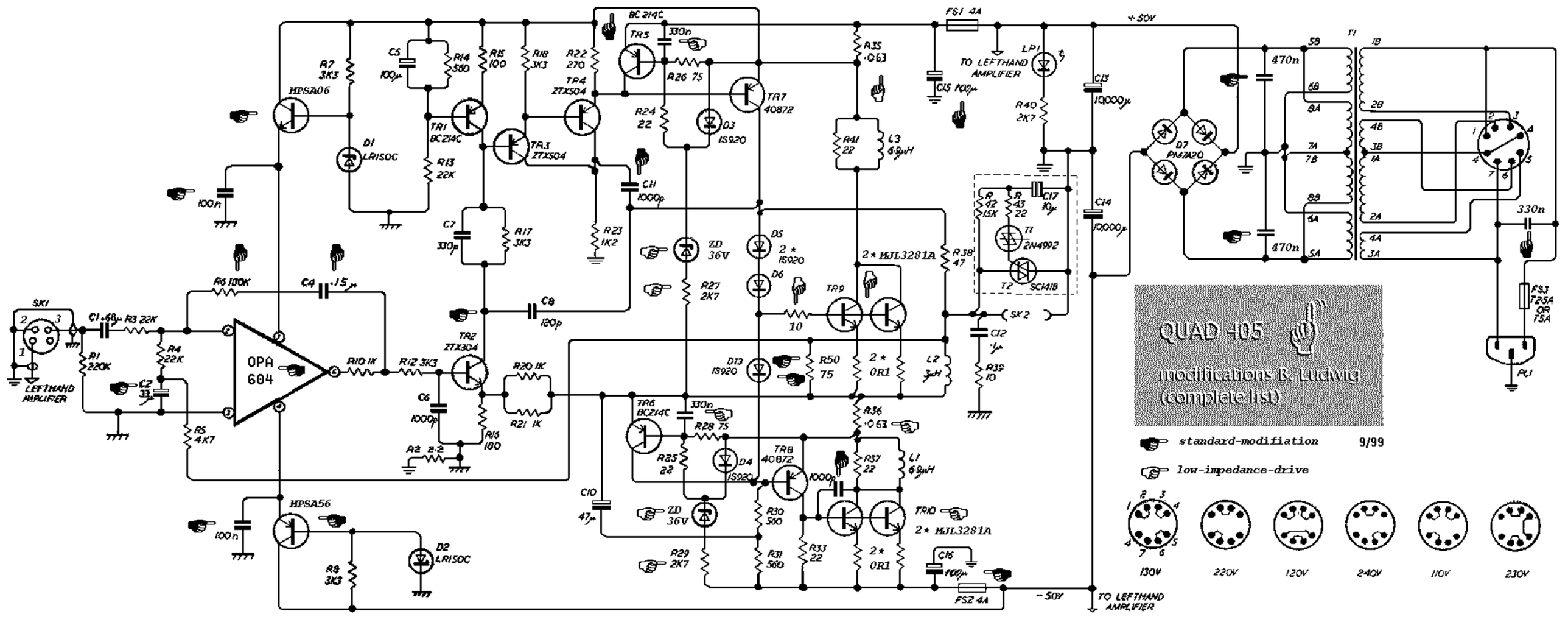
QUAD 405
modifications B. Ludwig
(complete list)
standard-modifiation
9/99
low-impedance-drive
130V
220V
120V
240V
110V
230V
+50V
-50V
FS1 4A
FS2 4A
FS3 T25A OR T5A
TO LEFTHAND AMPLIFIER
LEFTHAND AMPLIFIER
OPA 604
MPSA06
MPSA56
BC214C
ZTX504
ZTX304
40872
2N4992
SC141B
PM7A20
2 * MJL3281A
2 * IS920
2 * 0R1
SK1
SK2
PU1
T1
T2
LP1
C1 68µ
R3 22K
R1 220K
R4 22K
C2 33µ
R5 4K7
R6 100K
C4 15µ
R10 1K
R12 3K3
R2 2.2
C6 1000p
R16 180
R20 1K
R21 1K
C8 120p
C7 330p
R17 3K3
R13 22K
C5 100µ
R14 560
R15 100
R18 3K3
R22 270
R23 1K2
C11 1000p
R7 3K3
R8 3K3
D1 LR150C
D2 LR150C
100n
C10 47µ
ZD 36V
R27 2K7
R29 2K7
R24 22
R25 22
R26 75
R28 75
D3 IS920
D4 IS920
D5 2 * IS920
D6
D13 IS920
R30 560
R31 560
R33 22
R37 22
R36 0.63
R35 0.63
R41 22
L3 6.8µH
L1 6.8µH
L2 3µH
R50 75
R38 47
R39 10
R40 2K7
C15 100µ
C16 100µ
C13 10000µ
C14 10000µ
C17 10µ
C12 1µ
R42 15K
R43 22
470n
330n
D7 PM7A20